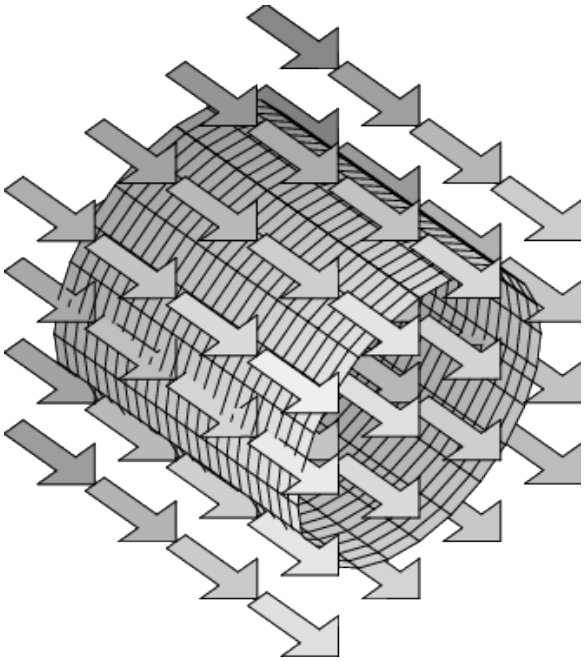

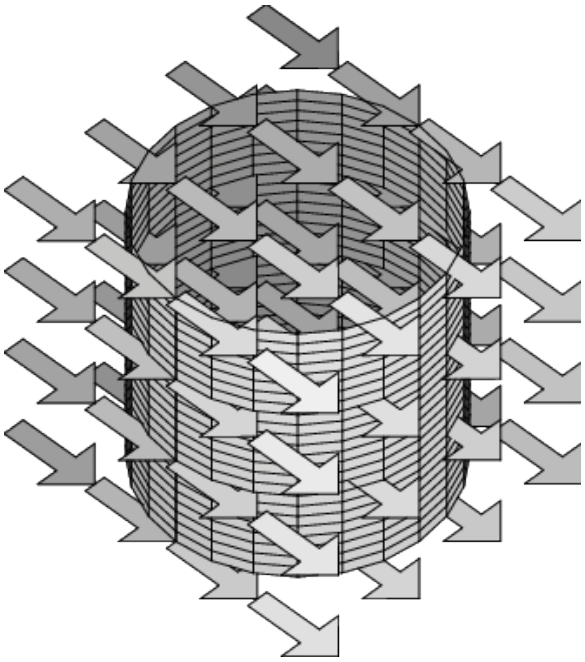

1 Flux through a Cylinder

(a) What do you think will be the flux through the cylindrical surface that is placed as shown in the constant vector field in the first figure?

(b) What if the cylinder is placed upright, as shown in the second figure? Explain.

2 Flux I

Find the flux of $\vec{\boldsymbol{F}} = x\,\hat{\boldsymbol{x}} + y\,\hat{\boldsymbol{y}} + z\,\hat{\boldsymbol{z}}$ out of a closed cylinder of radius 2 centered on the z-axis, with $-3 \leq z \leq 3$.

3 Flux II

Find the flux of $\vec{\boldsymbol{F}} = z^2\,\hat{\boldsymbol{z}}$ through the upper hemisphere of the sphere $x^2 + y^2 + z^2 = 25$, oriented away from the origin.

4 Flux III

Let $\vec{\boldsymbol{H}} = (e^{xy} + 3z + 5)\,\hat{\boldsymbol{x}} + (e^{xy} + 5z + 3)\,\hat{\boldsymbol{y}} + (3z + e^{xy})\,\hat{\boldsymbol{z}}$. Calculate the flux of $\vec{\boldsymbol{H}}$ through the square of side 2 with one vertex at the origin, one edge along the positive y-axis, one edge in the xz-plane with $x > 0$, $z > 0$, and with normal $\hat{\boldsymbol{n}} = \hat{\boldsymbol{x}} - \hat{\boldsymbol{z}}$.

5 Flux through a Plane

Find the upward pointing flux of the vector field $\vec{\boldsymbol{H}} = 2z\,\hat{\boldsymbol{x}} + \frac{1}{x^2+1}\hat{\boldsymbol{y}} + (3+2z)\hat{\boldsymbol{z}}$ through the rectangle R with one edge along the y axis and the other in the xz-plane along the line $z = x$, with $0 \leq y \leq 2$ and $0 \leq x \leq 3$.

6 Gauss's Law for a Rod inside a Cube

Consider a thin charged rod of length L standing along the z-axis with the bottom end on the x, y-plane. The charge density λ_0 is constant. Find the total flux of the electric field through a closed cubical surface with sides of length $3L$ centered at the origin.

7 Gauss's Law on a Cylindrical Shell

Consider an infinite positively charged (dielectric) cylindrical shell of inner radius a and outer radius b with a cylindrically symmetric internal charge density $\rho(\vec{r}) = \alpha\, e^{(ks)^2}$.

Answer each of the following questions:

(a) Use Gauss's Law and symmetry arguments to find the electric field at each of the three radii below:

   (a) $s > b$

   (b) $a < s < b$

   (c) $s < a$

(b) What dimensions do α and k have?

(c) For $\alpha = 1$, $k = 1$, sketch the magnitude of the electric field as a function of s.